GRAVELY® Keep.

1. Tractor models
2. old mower shaft
3. electrical

CUSTOMER SERVICE SEMINAR

FORM NO: 16180 (8-85)

PRINTED IN USA

HOW TO IDENTIFY TRACTORS

HOW TO IDENTIFY 30-INCH MOWERS

GRAVELY TRACTORS BY MODEL YEAR

SERIAL NUMBER BY CALENDER YEAR

CHANGES FROM 1984/1985 TO 1985/1986

a. EQUIPMENT
b. MOWERS
c. SNOW ATTACHMENTS
d. ACCESSORIES

1984/1985 APPLICATIONS CHART

1985/1986 APPLICATIONS CHART

SPECIAL TOOLS LIST

NOTES

HOW TO IDENTIFY TRACTORS

Two-Wheel Tractors

One should look for the serial number of the tractor first. If the serial can be located, then one can determine the year from the number. Serial numbers should be found:

1916-1936:	Model D
1937-1966:	Model L until 7.6 tractors Serial number riveted on top of fan housing (L-222)
1966-1972:	7.6, C8, C10, C10A, C12 tractors Serial number riveted on left side of of advanced casting
1972-Present:	500 and 5000 Series tractors Serial number on instrument panel
1984-Present:	5000 Series tractors Identification tag showing part number of tractor was added to bolt holding handlebar onto support tube

If one has reason to believe the serial number on the machine is not the original number or he cannot find the number:

Model D tractor (1916-1936) 2.5 h.p.

a.. Only has a single wheel in the center.

Model L tractor (1937-1955) 5 h.p.

a. The spark plug is slanted and uses a 15/16-inch wrench to remove.
b. The end of the camshaft is visible on the intake side of the engine. An oil seal was used to keep oil from leaking.
c. The oil pump on rear of engine has stamped in body L-103 (5-10 psi oil pump). The inlet and oulet parts on this pump were located in the engine crankcase because the pump body was not wide enough to incorporate them in the pump. This pump is about 1/2 as wide as later oil pumps.

Model L tractors (1955-1966) 6.6 h.p.

a. The spark plug is slanted and uses a 15/16-inch wrench to remove.
b. On the intake side of the engine there is a freeze plug at the end of the camshaft.
c. The oil pump on rear of engine has stamped in body L-850. The inlet and outlet parts on this pump are cast into the body. This pump also used a gasket on each side of the pump body.

d. Began using aluminum carburetor in early sixties.
e. To determine an LI tractor (intermediate speed) versus another L model. The LI tractor had a bolt and nut attached on the right side axle housing. This bolt does not attach anything together. (See picture on cover of April, 1963 Model L parts list and can see bolt.)

Model 7.6 (1966-1976)

a. Changed position of spark plug to vertical instead of angled as in past. The spark plug is a standard size.
b. The oil pump on rear of engine has stamped in body 18073. The inlet and outlet ports on this pump are in pump body. This pump used no gaskets on pump body.
c. Began using Kohler engines in 1967. One can use engine serial number and spec. number to determine age.

Four-Wheel Tractors

One should look for the serial number of the tractor first. If the serial number can be located then one can determine the year from the number. Serial numbers should be found:

1964:	Westchester
1967-1971:	400 Series Serial number riveted on left side of advanced casting on Westchester - 400 Series
1971-1978:	800 Series Early 800 Series serial number riveted on top of engine adaptor plate. Later 800 Series serial number glued or riveted on seat pan support bracket underneath seat pan.
1978-Present:	8000 Series Serial number is glued on instrument panel. 1984-Present identification tag showing part number of tractor was also added to seat pan support bracket.

If one has reason to believe the serial number on the machine is not the original number or he cannot find the number:

400 Series tractor (2-wheel tractor transmission)

a. Early 400 Series had open gear steering (#11128) (1967-1970)
b. Later 400 Series had enclosed steering box (1970-1971)

800 Series tractor (8 speed transmission)

a. Early 800 Series had enclosed steering box (1971-1975)
b. Later 800 Series had rack & pinion steering (1976-1978)
c. Early 800 Series had keyed forward and reverse clutches (18049). Transmission case was painted inside and had limited slip differential. (1971-1974)
d. Later 800 Series had splined, cam actuated Fwd-Rev clutches (20449). Should be able to see splines on shaft that clutches slide on. (1975-1978)
e. All 800 Series tractors used a steering wheel (19448) that bolted onto the steering shaft. (1971-1978)

8000 Series tractors (8 speed transmission)

a. All 8000 Series have rack & pinion steering (1978-Present)
b. Early 8000 Series had splined, cam actuated Fwd-Rev clutches (20449). Should be able to see splines on shaft that clutches slide on. (1978-9/1/82)
c. Later 8000 Series have a different Fwd-Rev clutching mechanism using long flat springs. The clutches themselves have an aluminum cup on the back of the clutch hub. (9/1/82-Present)
d. All 8000 Series tractors used a steering wheel attached to the steering shaft by a taper and spline. (1978-Present).
e. If the tractor has a long frame (4" longer than standard), then it must be 1980 or newer. However, one cannot determine the age of a short frame tractor by the frame length.
f. Changed support in bottom of steering shaft from bearing support (21148) and spherical bearing (21147) to a one piece zinc steering support (35064). (9/1/83-Present)

8000 G Series tractors (8 speed transmission)

a. Redesign with changes in steering, linkages, long frame std., tighter turning radius, and component locations. (8/15/85)

NOTE: The age of 400, 800, and 8000 Series tractors can also be determined by the spec. and serial of the engine if the engine has not been changed.

NOTES

Kohler

Many Kohler engines have been used over the years. Please refer to our Kohler engine list to determine tractor model numbers from the engine type. From the serial number one can determine the year.

① ② ③

E - 172452 92 76430 100 26692

Year of Manufacture* identified by: a Letter/First Two Digits/If eight digit number - First Three Digits

SERIAL NUMBER SIGNIFICANCE

(Primarily a source of manufacturing history)

* Year of Manufacture

①		②		③	
A	1965	10-19	1969	100-109	1980
B	1966	20-29	1970	110-119	1981
C	1967	30-39	1971	120-129	1982
D	1968	40-49	1972	130-139	1983
E	1969	50-59	1973	140-149	1984
		60-69	1974	150-	1985
		70-72	1975		
		73-79	1976		
		80-89	1977		
		90-94	1978		
		95-99	1979		

Remaining digits are a factory code

Briggs and Stratton

B and S engines were never used on any two-wheel tractor. Four-wheel tractor uses are:

Model 816-S	(1974-1978)
Model 8160	(1978)
Model 8161	(1978)
Model 8166	(1979)
Model 8167	(1979)
Model 8169	(1980)
Model 8162-B	(1979 and 1984)
Model 8163-B	(1979-present)

Stamped in blower housing one will find model number, type and code number. From the code number one can determine the year. The first two digits correspond to the year of manufacture. The second two digits correcpond to the month of manufacture. The third two digits correspond to the day of manufacture. The last two digits indicate which assembly line the engine was built on.

Example: 84120611
84 = 1984
12 = December
06 = Sixth day
11 = Assembly line #11

Onan

Onan NB engine, single cylinder, 10-12 h.p.

NB-MS/1846 A	(10 h.p.)	Model 424	(1970-1971)
NB0MS/1847 A	(12 h.p.)	Model 430	(1970-1971)

Onan CCKA engine, twin cylinder, cast iron, 16.5 h.p.

CCKA-MS/1831 G		Model 450	(1968-1970)
CCKA-MS/1897 G		Model 450	(1968-1970)
CCKA-MS/1949 G		Model 450	(1968-1970)
CCKA-MS/2043 G		Model 450	(1968-1970)
CCKA-MS/2111 G			
CCKA-MS/2567 G	(800-8000 Series)		(1971-1981)
CCKA-MS/2813 J	816, 817, 8171,		
CCKA-MS/3110 J	8177, 8179		
CCKA-MS/3612 J			

Onan B43 engine, twin cylinder, aluminum with cast iron sleeves, 16 h.p.

B43M-GA016/3422A	Model 816-T	(1978)
	Model 8162-T	(1979-1980)
	Model 8163-T	(1979-1980)

Onan B48 engine, twin cylinder, aluminum with cast iron sleeves, 18 h.p.

B48M-GA018/3423A	Model 818-T	(1978)
	Model 8182-T	(1979-1980)
	Model 8183-T	(1979-1980)

Onan B48 engine, twin cylinder, aluminum with cast iron sleeves, 19.9 h.p.

B48G-GA019.9/3738B	Model 8199	(1980-1981)

For the serial number one can determine the year. Serial number of Onan engines contain one letter and then 9 or 10 digits. The letter corresponds to the month the engine was produced and the next two digits correspond to the year.

A	B	C	D	E	F	G	H	I	J	K	L
Jan.	Feb.	March	April	May	June	July	Aug.	Sept.	Oct.	Nov.	Dec.

Example: L845487021
L = December
84 = 1984

NOTES

NOTES

HOW TO IDENTIFY 30 - INCH MOWERS

LH Mower: Rotor plate on top of gearbox will turn with blade. Rotor plate is about the size of a 50 cent piece. Takes vertical shaft, P/N 13210 (RO 322)

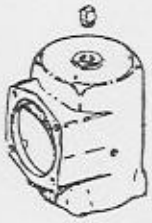

Small plug to fill oil in top of housing. Takes vertical shaft P/N 13197 (RO 337) or vertical shaft P/N 13198 (RO 343)

Large plug to fill oil in top of housing.
Takes vertical shaft P/N's:

a. 12851 which is replaced by kit 20678 consisting of 20676 shaft, 20626 weldment
b. 19844 which is replaced by shaft 20676
c. 20676

Small grease fitting in top of housing. Takes vertical shaft P/N 22520

Small grease fitting in top of housing. Casting is stronger than previous casting. Takes vertical shaft P/N 22520.

30 INCH MOWER DRIVE SHAFTS
(VERTICAL)

PN. 13210 (1952) LEFT HAND)

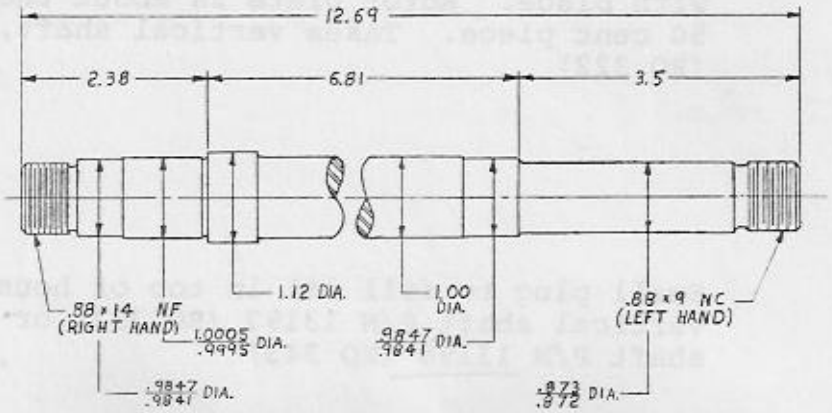

PN. 13197 (1956)

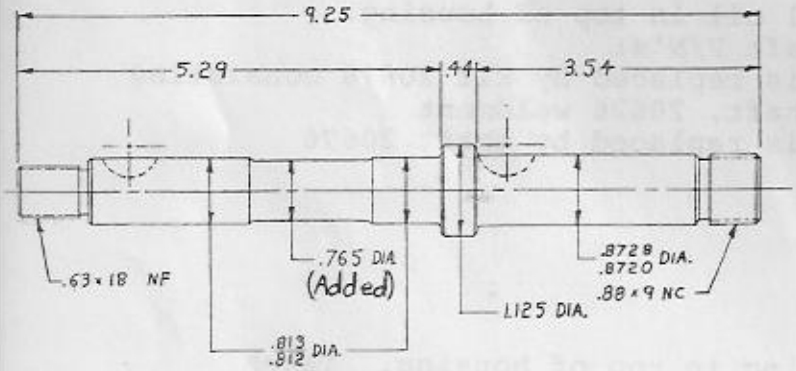

PN. 13198 (1957)

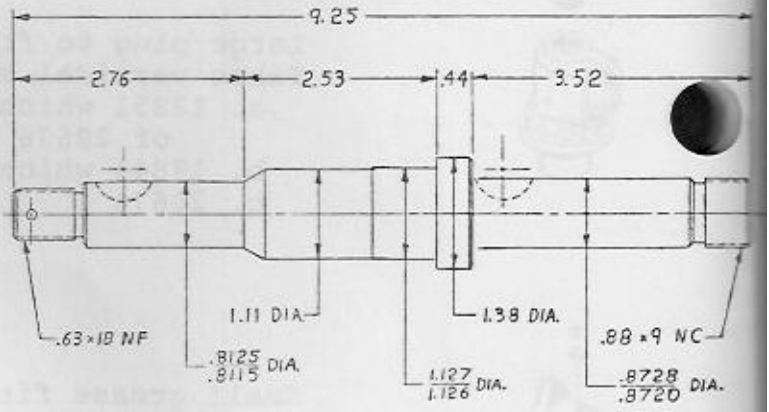

PN. 20676 (1973)

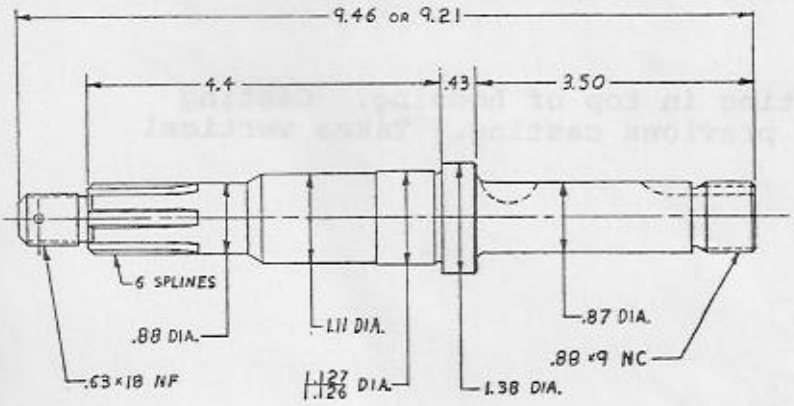

PN. 22520 (1976)

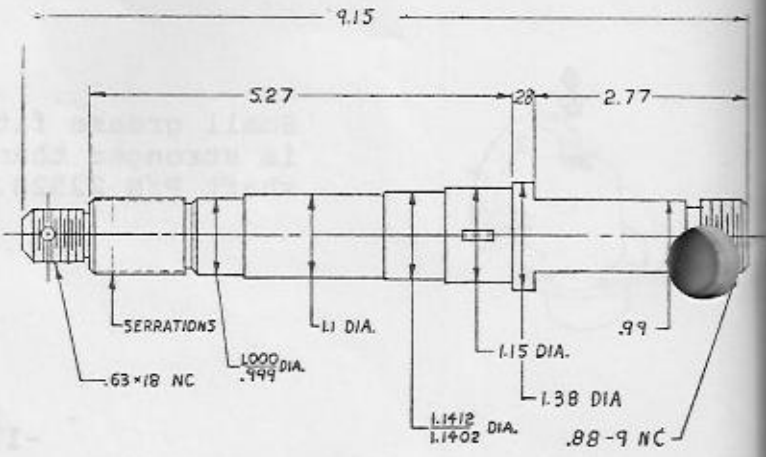

NOTES

NOTES

GRAVELY 2-WHEEL TRACTORS BY YEAR(S), BY MODEL

YEAR(S)	MODEL	DESCRIPTION
1916-36	Model "D"	1-Wheel Tractor, Gravely Engine, 2.5 HP
1937-55	Model "L"	2-Wheel Tractor, Gravely Engine, 5.0 HP, 8 Lead Worm, Fast Speed
1955-66	Model "L"	2-Wheel Tractor, Gravely Engine, 6.6 HP, 8 Lead Worm, Fast Speed
	Model "LI"	6 Lead Worm, Inter. Speed
	Model "LS"	4 Lead Worm, Slow Speed
1963	Model "L8"	2 Speed Axle, Swiftamatic Transmission
1966-76	Model "C"	2-Wheel Tractor, Gravely Engine, 7.6 HP, 8 Lead Worm, Fast Speed
	Model "CI"	6 Lead Worm, Inter. Speed
	Model "CS"	4 Lead Worm, Slow Speed
	Model "C8"	2 Speed Axle, Swiftamatic Transmission
1976		Gravely stopped building the 7.6 HP 2-wheel tractor
1967	Commercial 10 "C-10"	Kohler Engine, 10 HP, Fast Speed, Starter Generator
1968	Commercial 10A "C-10A"	Kohler Engine, 10 HP, 2-Speed, Swiftamatic Transmission, Alternator
1969	Commercial 12 "C-12"	Kohler Engine, 12 HP, 2-Speed Axle, Swiftamatic Transmission, Alternator
1970-72	Commercial 8 "C-8"	Kohler Engine, 8 HP, 2-Speed Axle, Swiftamatic Transmission, Alternator
1972-77	Model 520	Kohler Engine, 8 HP, Manual Start, 6 Lead Worm, Intermediate Speed
	Model 521	Kohler Engine, 8 HP, Manual Start, 4 Lead Worm, Slow Speed
	Model 522	Kohler Engine, 8 HP, Electric Start, 6 Lead Worm, Intermediate Speed
	Model 524	Kohler Engine 8 HP, Manual Start, 2 Speed Axle, Swiftamatic Transmission
	Model 526	Kohler Engine 8 HP, Electric Start, 2 Speed Axle, Swiftamatic Transmission
	Model 546	Kohler Engine, 10 HP, Electric Start, 2 Speed Axle, Swiftamatic Transmission
	Model 564	Kohler Engine, 12 HP, Manual Start, 2 Speed Axle, Swiftamatic Transmission, Remote Air Cleaner
	Model 566	Kohler Engine, 12 HP, Electric Start, 2 Speed Axle, Swiftamatic Transmission

2-WHEEL TRACTORS (CONT'D)

YEAR(S)	MODEL	DESCRIPTION
1977-80	Model 5200	Kohler Engine, 8 HP Manual Start, 6 Lead Worm, Intermediate Speed
	Model 5210	Kohler Engine, 8 HP, Manual Start, 4 Lead Worm, Slow Speed
	Model 5240	Kohler Engine, 8 HP, Manual Start, 2-Speed Axle, Swiftamatic Transmission
	Model 5260	Kohler Engine, 8 HP, Electric Start, 2-Speed Axle, Swiftamatic Transmission
	Model 5640	Kohler Engine, 12 HP, Manual Start, 2-Speed Axle, Swiftamatic Transmission
	Model 5660	Kohler Engine, 12 HP, Electric Start, 2-Speed Axle, Swiftamatic Transmission
	Model 5460	Kohler Engine, 10 HP, Electric Start, 2-Speed Axle, Swiftamatic Transmission
	Model 5243 Commercial	Roofer, Kohler Engine, 8 HP, Manual Start, 2-Speed Axle, Swiftamatic Transmission
	Model 5245 Commercial	Kohler Engine, Commercial 8 HP, Manual Start, 2-Speed Axle, Swiftamatic Transmission
	Model 5265 Commercial	Kohler Engine, Commercial 8 HP, Electric Start, 2-Speed Axle, Swiftamatic Transmission
1977-80	Model 5645 Commercial	Kohler Engine, Commercial 12 HP, Manual Start, 2-Speed Axle, Swiftamatic Transmission
	Model 5665 Commercial	Kohler Engine, Commercial 12 HP, Electric Start, 2-Speed Axle, Swiftamatic Transmission
1980-85	Model 5200 Homeowner	Kohler Engine, 8 HP, Manual Start, 6 Lead Worm, Intermediate Speed
	Model 5240 Homeowner	Kohler Engine, Homeowner 8 HP, Manual Start, 2-Speed Axle, Swiftamatic Transmission
	Model 5260 Homeowner	Kohler Engine, Homeowner 8 HP, Electric Start, 2-Speed Axle, Swiftamatic Transmission, 3 Amp Charging System
1980-85	Model 5645 Professional	Kohler Engine, Professional 12 HP, Manual Start, 2-Speed Axle, Swiftamatic Transmission
	Model 5665 Professional	Kohler Engine, Professional 12 HP, Electric Start, 15 Amp, 2-Speed Axle, Swiftamatic Transmission
1985	Model 5465	Kohler Engine, 10 HP, Electric Start, 2-Speed Axle, 15 Amp, Swiftamatic Transmission, Steering Brake Std.

2-WHEEL TRACTORS (CONT'D)

YEAR(S)	MODEL	DESCRIPTION
1986	Model 5200	Kohler Engine, 8 HP, Recoil Start, 6 Lead Worm, Intermediate Speed, With or Without Steering Brakes Std.
	Model 5240	Kohler Engine, 8 HP, Recoil Start, 2-Speed Axle, Swiftamatic Transmission, With or Without Steering Brakes Std.
	Model 5260	Kohler Engine, 8 HP, Electric Start, 2-Speed Axle, Swiftamatic Transmission, 3 Amp Charging System, With or Without Steering Brakes Std.
	Model 5465	Kohler Engine, 10 HP, Electric Start, 2-Speed Axle, Swiftamatic Transmission, 15 Amp Charging System, With or Without Steering Brakes Std.
	Model 5645	Kohler Engine, 12 HP, Recoil Start, 2-Speed Axle, Swiftamatic Transmission, With or Without Steering Brakes Std.
	Model 5665	Kohler Engine, 12 HP, Electric Start, 2-Speed Axle, Swiftamatic Transmission, 15 Amp Charging System, With or Without Steering Brakes Std.

NOTES

GRAVELY 4-WHEEL TRACTORS BY YEAR(S), BY MODEL

YEAR(S)	MODEL	DESCRIPTION
1964	Westchester	
1967	Model 424	Kohler Engine, 10 HP, Starter-Generator, 4-Speed Planetary Transmission
1968-71	Model 424	Kohler Engine, 10 HP, Alternator, 4-Speed Planetary Transmission
	Model 424	Onan NB Engine, 10 HP, Alternator, 4-Speed Planetary Transmission
	Model 430	Kohler Engine, 12 HP, Alternator, 4-Speed Planetary Transmission
	Model 430	Onan NB Engine, 12 HP, Alternator, 4-Speed Planetary Transmission
1969	Model 432	Kohler Engine, 14 HP, Alternator, 4-Speed Planetary Transmission
1970	Model 450	Onan Engine, 16.5 HP, Twin Cylinder, Cast Iron, 4-Speed Planetary Transmission, Electric Lift
1970-77	Model 408	Lawn Tractor, Kohler Engine, 8 HP, V-Belt Drive, 4-Speed Transmission
1971-76	Model 816	Onan Engine, 16.5 HP, Twin Cylinder, Cast Iron, 8-Speed Transmission, Hydraulic Lift
1972-78	Model 810	Kohler Engine, 10 HP, 8-Speed Transmission
	Model 812	Kohler Engine, 12 HP, 8-Speed Transmission
1972-74	Model 814	Kohler Engine, 14 HP, 8-Speed Transmission
1974-78	Model 816-S	B & S Engine, 16 HP, Single Cylinder, 8-Speed Transmission
1977	Model 817	Onan Engine, 16.5 HP, Twin Cylinder, Cast Iron, 8-Speed Transmission, Hydraulic Lift
1978	Model 816-T	Onan Engine, 16 HP, Twin Cylinder, 8-Speed Transmission Hydraulic Lift
	Model 818-T	Onan Engine, 18 HP, Twin Cylinder, 8-Speed Transmission, Hydraulic Lift
1978	Model 8120	Kohler Engine, 12 HP, 8-Speed Transmission, Manual Lift (Commercial)
	Model 8121	Kohler Engine, 12 HP, 8-Speed Transmission, Hydraulic Lift (Commercial)
1978	Model 8160	B & S Engine, 16 HP, Single Cylinder, 8-Speed Transmission, Manual Lift (Commercial)
	Model 8161	B & S Engine, 16 HP, Single Cylinder, 8-Speed Transmission, Hydraulic Lift (Commercial)
	Model 8171	Onan Engine, 16.5 HP, Twin Cylinder, Cast Iron, 8-Speed Transmission, Manual Lift (Commercial)
1979-81 (1985)	Model 8102 (Special Run)	Kohler Engine, 10 HP, 8-Speed Transmission, Manual Lift
1979-85	Model 8122	Kohler Engine, 12 HP, 8-Speed Transmission, Manual Lift
	Model 8123	Kohler Engine, 12 HP, 8-Speed Transmission, Hydraulic Lift

4-WHEEL TRACTORS (CONT'D)

YEAR(S)	MODEL	DESCRIPTION
1979-80	Model 8162-T	Onan Engine, 16 HP, Twin Cylinder, 8-Speed Transmission, Manual Lift
	Model 8163-T	Onan Engine, 16 HP, Twin Cylinder, 8-Speed Transmission, Hydraulic Lift
	Model 8182-T	Onan Engine, 18 HP, Twin Cylinder, 8-Speed Transmission, Manual Lift
	Model 8183-T	Onan Engine, 18 HP, Twin Cylinder, 8-Speed Transmission, Hydraulic Lift
1979 (1984, 85)	Model 8162-B (Special Run)	B & S Engine, 16 HP, Single Cylinder, 8-Speed Transmission, Manual Lift
1979-85	Model 8163-B	B & S Engine, 16 HP, Single Cylinder, 8-Speed Transmission, Hydraulic Lift
1979	Model 8126	Kohler Engine, 12 HP, Single Cylinder, 8-Speed Transmission Manual Lift (Commercial)
	Model 8127	Kohler Engine, 12 HP, Single Cylinder, 8-Speed Transmission Hydraulic Lift (Commercial)
	Model 8166	B & S Engine, 16 HP, Single Cylinder, 8-Speed Transmission, Manual Lift (Commercial)
	Model 8167	B & S Engine, 16 HP, Single Cylinder, 8-Speed Transmission, Hydraulic Lift (Commercial)
	Model 8177	Onan Engine, 16.5 HP, Twin Cylinder, Cast Iron, 8-Speed Transmission, Hydraulic Lift (Commercial)
1980	Model 8128	Kohler Engine, 12 HP, 8-Speed Transmission, Manual Lift Long Frame (Commercial)
1980-81	Model 8129	Kohler Engine, 12 HP, 8-Speed Transmission, Hydraulic Lift, Long Frame (Commercial)
	Model 8169	B & S Engine, 16 HP, 8-Speed Transmission, Hydraulic Lift, Long Frame (Commercial)
	Model 8179	Onan Engine, 16.5 HP, Twin Cylinder, Cast Iron, 8-Speed Transmission, Hydraulic Lift, Long Frame (Commercial)
	Model 8199	Onan Engine, 19.9 HP, Twin Cylinder, Aluminum, 8-Speed Transmission, Hydraulic Lift, Long Frame (Commercial)
1980 (1984, 85)	Model 8173-KT (Special Run)	Kohler Engine 17 HP, Twin Cylinder, 8-Speed Transmission, Hydraulic Lift (Consumer)
	Model 8193-KT	Kohler Engine, 19 HP, Twin Cylinder, 8-Speed Transmission Hydraulic Lift (Consumer)
1981-85	Model 8179-KT	Kohler Engine 17 HP, Twin Cylinder, 8-Speed Transmission, Hydraulic Lift, Long Frame (Professional)
	Model 8199-KT	Kohler Engine 19 HP, Twin Cylinder, 8-Speed Transmission, Hydraulic Lift, Long Frame (Professional)

4-WHEEL TRACTORS (CONT'D)

YEAR(S)	MODEL	DESCRIPTION
1977	Model GMT-900	Continental Engine, 27 HP, Four Cylinder, Water Cooled 8-Speed Transmission
1977-82	Model GMT-9000	Continental Engine, 27 HP, Four Cylinder, Water Cooled 8-Speed Transmission
1983-86	Model 1138	B & S Engine, 11 HP, I.C., 6-Speed Foote Transmission, V-Belt Drive. Includes 38" 2-Spindle Mower
1986	Model 1132	B & S Engine, 11 HP, I.C., 6-Speed Foote Transmission, V-Belt Drive. Includes 32" Single Blade Mower
1985-86	Model 7173-H	Kohler Engine, 17 HP, Twin Cylinder, Sundstrand Hydro Transmission, Hydraulic Lift
1985	Model 8172-KT	Kohler Engine, 17 HP, Twin Cylinder, 8-Speed Transmission, Manual Lift
1986	Model 8122-G	Kohler Engine, 12 HP, 8-Speed Transmission, Manual Lift, Flip-Up Hood, Long Frame, Shorter Turning Radius
	Model 8123-G	Kohler Engine, 12 HP, 8-Speed Transmission, Hydraulic Lift, Flip-Up Hood, Long Frame, Shorter Turning Radius
	Model 8163-G	B & S Engine, 16 HP, 8-Speed Transmission, Hydraulic Lift, Flip-Up Hood, Long Frame, Shorter Turning Radius
	Model 8179-G	Kohler Engine, 17 HP, Twin Cylinder, 8-Speed Transmission, Hydraulic Lift, Flip-Up Hood, Long Frame, Shorter Turning Radius
	Model 8199-G	Kohler Engine, 19 HP, Twin Cylinder, 8-Speed Transmission, Hydraulic Lift, Flip-Up Hood, Long Frame, Shorter Turning Radius

NOTES

TRACTOR SERIAL NUMBER MODELS
By Year of Manufacture

Serial Number	Year	
2465 — 2781	1939	
2782 — 4105	1940	
4106 — 6054	1941	
6055 — 7454	1942	
7455 — 9130	1943	
9131 — 11213	1944	
11214 — 13320	1945	
13521 — 18957	1946	
18958 — 27996	1947	
27997 — 38755	1948	
38756 — 48399	1949	
48400 — 56450	1950	
56451 — 66029	1951	
66030 — 75922	1952	MODEL L, 5.0 HP
75923 — 86142	1953	LOW VOLUME
86143 — 95440	1954	OIL SYSTEM
95441 — M-5565	1955	
M- 5566 — M-15873	1956 — New clutches	
M-15874 — M-26693	1957	
M-26694 — M-36957	1958	
M-36958 — M-50080	1959	
M-50081 — M-62157	1960	
M-62158 — M-75700	1961	
M-75700 — M-90897	1962	
M-90897 — 2M4745	1963	MODEL L, 6.6 HP
2M 4745 — 2M18900	1964	HIGH VOLUME
2M18900 — 2M34215	1965	OIL SYSTEM
2M34216 — 2M51800 (J7600)	1966	MODEL 7.6
J 7600 — J23680	1967	
J23680 — J35750	1968	
J35750 — J52820	1969	
J52820 — J64939	1970	
J64940 — J75550 - 6550H	1971 — Bronze Gear diff. Change	
J75551 — J87989 —	1972	
J87990 — 101356	1973	
101357 — 116522	1974	
116523 — 125962	1975	

Four-Wheel

Serial Number	Year
000100A - 003848A	1969
003849A - 007522A	1970
007523A - 10877A	1971
10878A - 15044A	1972
15045A - 20480A	1973
20481A - 26289A	1974
26290A - 28838A	1975

408 Tractor

Serial Number	Year
01003 - 01845	1970
01846 - 04021	1971
04022 - 04743	1972
04743 - 05856	1973
05857 - 7224	1974
07225 - 7697	1975

In the middle of October 1975, the serial numbers were changed and started at 200,000. This system includes attachment serial numbers.

200000 - 205038	1975
205039 - 259008	1976
259009 - 311671	1977
311672 - 372210	1978
372211 - 407044	1979
500001 - 504958	1979
1600000 - 1612543	1979
5001100 - 5005783	1979
5006751 - 5018441	1979
504959 - 510009	1980
514751 - 520273	1980
1620000 - 1639081	1980
5000001 - 5001099	1980
5005784 - 5006750	1980
5018442 - 5037378	1980
510010 - 514750	1981
520274 - 533768	1981
5037379 - 5058284	1981
533769 - 543773	1982
5058285 - 5071795	1982
543774 - 557706	1983
800000 - 802499	2/83 TO 4/84 (MODEL 1138)
5071796 - 5087908	1983
557707 - 567265	1984
5087909 - 5108708	1984
567266 -	1985
5108709 -	1985

Note: These serial numbers are approximate. For exact year of manufacture contact the factory.

Year	Letter of Mfg. No.	Serial Numbers Incl.
1957	A	SR-1 - SR-1663
1958	B	SR-1664 - SR-3948
1959	C	SR-3949 - SR-7364
1960	D	SR-7365 - SR-9860
1961	E	SR-9861 - SR-11,959
1962	F	SR-11,960 - SR-14,737
1963	G	SR-14,738
1964	H	WESTCHESTER

Note: "J" Serial Numbers in 1967 and 1968 include 4-Wheel Tractors.

NOTES

NOTES

NOTES

PRODUCT CHANGES FROM 84/85 to 85/86

5000 SERIES

I. TRANSMISSION - No change

II. FRAME
1. New hood with no hole for gas cap
2. New battery box and hold down

III. ENGINE, FUEL, EXHAUST
1. Stellite intake and exhaust valves with rotators on 8 HP
2. Stellite exhaust valve and rotator on 10 HP
3. Fuel filter standard

IV. ELECTRICAL
1. New ground to frame with a stud bolt
2. Relocate regulator/rectifier

8000 - G SERIES

I. TRANSMISSION
   1. Tapered hubs and axles
   2. Forward/Reverse clutch linkage
   3. Brake linkage
   4. Hi/Lo linkage is now adjustable

II. HYDRAULICS
   1. Filter as a resevoir
   2. New lines & hoses
   3. Relocate valve

III. STEERING
   1. Tighter turning radius - 26.5"
   2. Bushing in front axle - all

IV. FRAME
   1. Long frame standard
   2. Flip up hood
   3. New grill
   4. Battery and fuel tank location reversed
   5. New seat with (2) seat switches
   6. New instrument panel

V. ENGINE, FUEL, EXHAUST
   1. Kohler twin closure plate and adapter plate combined - now uses (2) .125 races
   2. New adapter plate for Kohler 12 HP and B&S 16 HP using (2) .125 races
   3. New exhaust on B&S 16 HP
   4. Fuel filters standard
   5. Stellite exhaust valve with rotator on 10 HP, 12 HP, and KT Kohler engines
   6. New throttle cables with bolt on bracket
   7. Push-pull type choke
   8. New fuel tank - fitting location changed and will replace old tank P/N 12383

VI. ELECTRICAL
   1. Sealed beam headlights
   2. New wiring
   3. Ammeter standard - all
   4. Hourmeter standard on KT's
   5. Time delay switch

PRO LINE

I. TRANSMISSION
   1. Sprocket on transmission is 12 tooth vs. 8 tooth - 50% increase
   2. Top ground speed 6.00 MPH vs. 4.00 MPH

II. FRAME
   1. New instrument panel
   2. Slotted hole in bearing support weldment

III. MOWER
   1. New 36" multi-mode mower

PM-50

I. TRANSMISSION
   1. Positive neutral detent

II. FRAME
   1. New seat with (2) seat switches
   2. 1/2 vs. 3/8 bolt in advance casting

III. STEERING - No change

IV. ENGINE, FUEL, EXHAUST
   1. Heat shield
   2. Muffler shield

V. ELECTRICAL
   1. Time delay switch
   2. New wiring

PRO MASTER POWER UNIT

I. TRANSMISSION
   1. Eight speed standard on 19 HP

II. FRAME
   1. New footboards
   2. New seat with (2) seat switches
   3. New instrument panel
   4. Offset brake levers on 19 HP tire chain clearance

III. STEERING - No change

IV. ENGINE, FUEL, EXHAUST
   1. Kohler twin closure plate and adapter plate combined - now uses (2) .125 races
   2. Fuel filter added
   3. Stellite exhaust valves with rotators on Kohler twins

V. ELECTRICAL
   1. Time delay switch
   2. Hourmeter standard
   3. New wiring

VI. LIFT
   1. Hydraulic lift standard on 19 HP
   2. Manual lift standard on 17HP

7173 - H

I. TRANSMISSION - No change

II. FRAME
   1. New front grille casting and related parts

III. STEERING - No change

IV. ENGINE, FUEL, EXHAUST - No change

V. ELECTRICAL - No change

VI. LIFT - No change

NOTES

MOWER CHANGES FROM 84/85 to 85/86

(5000 & 8000 Series)

40" & 50" (3 Blade) Mowers

Old and new interchangeable

1. New Belt Covers - quick removal, no tools required
2. New Leveling System - eccentric leveling in cams & wheels
3. New Height Adjustment lever - much stronger
4. New Axle Pivot Weldment - accomodates new height adjustment lever
5. Belt covers on 40" are not as wide for clearance for new axle pivot assembly.

60" MOWERS

Old mowers will not fit new G tractors (sharper turning radius allows front tire interference)
New mowers will fit all long frame 8000 tractors

1. Anti-Scalp Rollers standard
2. New Belt Covers - quick removal, no tools required
3. New Gearbox Support Plate - enlarged notch for longer Pivot Arm Weldment
4. New Pivot Arm Weldment - 1" longer for front wheel clearance
5. Added two 1/2 - 13 jam nuts to lift rod to prevent possible interference.

40" WING MOWER

1. Need to use 4 spacers #39015 and 4 bolts #180194 for twin cylinder tractors or for use with rear engine guard - increases clearance from rotating screen.

GRASS CATCHER FRAME

Old Blower Frame Kit will not fit new G tractors
New Blower Frame Kit will fit on all 8000 Series built after 9-1-82.

1. New Frame Weldment - added holes for wear tabs
2. Added Wear Tab - replaceable
3. New Support Weldment - provides clearance for new fwd/rev mechanism
4. New Support Rod - shorter for different support weldment

GRASS CATCHER HOSES

1. New hose material on boot kits and 3 grass catchers

MOWERS (Pro-Master)

ALL MOWERS

1. New Belt Covers - quick removal, no tools required

MOWERS (Pro)

1. New 36" Mower - multimode mower, 2 spindles
2. New Grass Catcher - plastic instead of aluminum or steel

SNOW ATTACHMENT CHANGES FROM 84/85 to 85/86

5000 Series

32 - INCH SNOWBLOWER

Old and new interchangeable

1. Reinforced Frame - stronger
2. Thicker Scraper Bar - lasts longer
3. Thicker Skids - lasts longer

WINDBREAKER CAB

Should fit all 5000 series tractors

1. New cab for operator comfort

8000 Series

40 & 48 - INCH SNOWBLOWERS

Old and new interchangeable

1. Thicker Scraper Bar - Lasts longer
2. Thicker Skids - lasts longer

44 - INCH POWER BRUSH

1. Power Brush completing kit - part number changes, New kit and old kit are not interchangeable

CAB

Old and new are not interchangeable, a new cab fits G tractors

1. New cab accomodates changes

7173-H

48 - INCH SNOWBLOWER

Old and new interchangeable

1. Thicker Scraper Bar - lasts longer
2. Thicker Skids - lasts longer

PROMASTER 19 HP

48 - INCH SNOWBLOWER

Snowblower should not be used on old powerunits because cannot use chains and do not have slow speeds.

1. Uses 48" Snowblower for 7173-H
2. Must use adaptor kit number 40050 to attach

CAB

Fits 1985/1986 only

1. New cab for operator comfort

CHANGES IN ACCESSORIES FROM 84/85 to 85/86

5000 SERIES

STEERING BRAKE KIT (40683)

New kit will fit older 5000 series tractors, but old will not fit new tractors.

1. Added notches in handle bar linkage arm for clearance between arm and hood.

8000 SERIES

FRONT DRIVE KIT (40252)

New kit will fit older 8000 series tractors, but old kit will not fit G tractors.

1. L.H. and R.H. Brackets (11697, 11698) have the top corners cut off to clear new style grille. Changed to 40324 & 40325.

LIFT ASSIST KIT (40251)

New kit will fit older 8000 series tractors, but old kit will not fit G tractors.

1. L.H. and R.H. Latch Assemblies (11275, 11274) have handles bent outward to clear wider hood, changed to 40263 & 40264.
2. Replaced Latch Pins (11279) with Latch Pins (31688).

INDIVIDUAL REAR WHEEL BRAKE KIT (40250)

New kit will not fit old tractors and old kit will not fit new G tractors.

1. Brake Links changed from 35023 & 20192 to 40327.
2. Brake Rods changed from 35018 & 20193 to 40636. 40636 rod is same as 35018 except added a hole.
3. L.H. Brake Pedal changed from 35019 to 40635. Changed the way parts are welded for clearance.
4. Brake Drums changed from 20184 to 40328. Tapered axles on new brake drums.

WEIGHT RACK (40638)

New kit will fit older 8000 series tractors, but old kit will not fit G tractors.

1. Angle Supports changed from 20436 & 20437 to 40644 & 40640. Changed because shorter turning radius caused tire interference.
2. Left and Right Supports changed from 20442 & 20441 to 40642. Changed because old supports interfered with new hood.
3. The Latch Pins were changed from 11279 to 31688.
4. L.H. and R.H. Brackets (11697, 11698) have the top cornors cut off to clear new style grille. New part numbers are 40324 and 40325.
5. Two of the 1/2-13 x 1 1/2 inch bolts have changed to 1/2 - 13 x 2.25 inches.
6. Spacers have changed from 20435 to Nylon Bushings, 10174.

7. Cotter Pins have changed from 137228 to Hair Pins, 10405.
8. Support Weldment, 20440, has changed to 40643. Four (4) holes were added to accomodate the new angle supports.
9. The other four (4), 1/2 - 13 x 1 1/2 inch bolts have changed to 1/2 - 13 x 2 round head square neck bolts.
10. The Shaft changed from 20434 to 40639. The shaft is now shorter.

REAR PTO KIT (40709)

New kit will fit all 8000 series tractors made after 9-1-82. Old kit will not fit new G tractors.

1. Made improvements in attaching the drive chain assembly to tractor frame.
2. Made improvements in reducing wear in the axle bearing retainer casting.
3. Old kit will fit new tractor if replace bracket 35151 with bracket 40707 and use additional hardware: 3 washers, 120389; one lock nut, 435507; and one 1/2 - 13 x 2 bolt, 180181.

LIFTABLE REAR HITCH (40701)

New kit will fit all 8000 series tractors. Old kit will also fit new G tractors.

1. Changed cross shaft weldment from 24375 to 40705. The new weldment has a stop to eliminate hitch from lifting too high.
2. Should try to use new hitch on tractors built after 9-1-82 whenever possible. Eliminates possibility of bending frd-rev clutch rod.

ENGINE GUARD (35401)

New and old Guard will fit all 8000 series including G tractors with Kohler or Briggs & Stratton engines. Must use new guard if also installing spacers for clearance on wing mower.

1. Enlarged cut out in bottom of guard to allow clearance for spacers for rear hitch.
2. Cannot be used with liftable rear hitch.

NOTES

NOTES

APPLICATI[illegible] CHART
(Effective September 1, 1984)

TWO-WHEEL TRACTOR -Mowing-	5200 (35713)	5240 (35714)	5260 (35715)	5645 (38267)	5665 (38265)
30" (Short Drive cannot be used with stamped deck.) 23075 and 34927 32443 and 32119 or 34927	No Kit Required	No Kit Required	No Kit Required	No Kit Required	No Kit Required
40"/2-Blade 25120	Quick Hitch Pin 35719	Quick Hitch Pin 35719	Quick Hitch Pin 35719	Quick Hitch Pin 35719	Quick Hitch Pin 35719
40"/2-Blade 11362 Drive 37896 Deck	No Kit Required Remove Attm. Adaptor 35718	No Kit Required Remove Attm. Adaptor 35718	No Kit Required Remove Attm. Adaptor 35718	No Kit Required Remove Attm. Adaptor 35718	No Kit Required Remove Attm. Adaptor 35718
32" Flail 21305 (Includes Locking Strap)	Quick Hitch Pin 35719	Quick Hitch Pin 35719	Quick Hitch Pin 35719	Quick Hitch Pin 35719	Quick Hitch Pin 35719
42" Sickle 10281 Drive 10287 Bar	No Kit Required Remove Attm. Adaptor 35718	No Kit Required Remove Attm. Adaptor 35718	No Kit Required Remove Attm. Adaptor 35718	No Kit Required Remove Attm. Adaptor 35718	No Kit Required Remove Attm. Adaptor 35718
40"/3-Blade 34427 38685	Front Mount 15569 Quick Hitch Pin 35719	Front Mount 15569 Quick Hitch Pin 35719	Front Mount 15569 Quick Hitch Pin 35719	Front Mount 15569 Quick Hitch Pin 35719	Front Mount 15569 Quick Hitch Pin 35719
50"/3-Blade 38684	Not Recommended Lack of Power	Not Recommended Lack of Power	Not Recommended Lack of Power	Front Mount 15569 Quick Hitch Pin 35719	Front Mount 15569 Quick Hitch Pin 35719

APPLICATIONS CHART
(Effective September 1, 1984)

TWO-WHEEL TRACTOR -Snow Removal-	5200 (35713)	5240 (35714)	5260 (35715)	5645 (38267)	5665 (38265)
32" Snowblower 38598 (Includes Locking Strap)	Quick Hitch Pin 35719 *Chains (one) 11344 12125 **14950	Quick Hitch Pin 35719 *Chains (one) 11344 12125 **14950	Quick Hitch Pin 35719 *Chains (one) 11344 12125 **14950	Quick Hitch Pin 35719 *Chains (one) 11344 12125 **14950	Quick Hitch Pin 35719 *Chains (one) 11344 12125 **14950
Dozer 21466	Hitch 38288 Quick Hitch Pin 35719 *Weight 21902 *Skid 11812	Hitch 38288 Quick Hitch Pin 35719 *Weight 21902 *Skid 11812	Hitch 38288 Quick Hitch Pin 35719 *Weight 21902 *Skid 11812	Hitch 38288 Quick Hitch Pin 35719 *Weight 21902 *Skid 11812	Hitch 38288 Quick Hitch Pin 35719 *Weight 21902 *Skid 11812
Power Brush 22118	Quick Hitch Pin 35719 Comp. Kit 19823	Quick Hitch Pin 35719 Comp. Kit 19823	Quick Hitch Pin 35719 Comp. Kit 19823	Quick Hitch Pin 35719 Comp. Kit 19823	Quick Hitch Pin 35719 Comp. Kit 19823
Cart 22172	Trail Hitch 11627 Coup. Strut. 11980	Trail Hitch 11627 Coup. Strut. 11980	Trail Hitch 11627 Coup. Strut. 11980	Trail Hitch 11627 Coup. Strut. 11980	Trail Hitch 11627 Coup. Strut. 11980

*Recommended accessory
**Cannot be used with Steering Brake Kit

APPLICATION CHART
(Effective September 1, 1984)

TWO-WHEEL TRACTOR -Gardening-	5200 (35713)	5240 (35714)	5260 (35715)	5645 (38267)	5665 (38265)
Rotary Plow 22161	No Kit Required	No Kit Required	No Kit Required	No Kit Required	No Kit Required
Rotary Cultivator 22162	Rotary Plow 22161 or Plow Drive 23334	Rotary Plow 22161 or Plow Drive 23334	Rotary Plow 22161 or Plow Drive 23334	Rotary Plow 22161 or Plow Drive 23334	Rotary Plow 22161 or Plow Drive 23334
Lawn Renovator 37021	Rot. Plow 22161 or Plow Drv. 23334 Rot. Cult 22162 Gauge Whl 37032	Rot. Plow 22161 or Plow Drv. 23334 Rot. Cult 22162 Gauge Whl 37032	Rot. Plow 22161 or Plow Drv. 23334 Rot. Cult 22162 Gauge Whl 37032	Rot. Plow 22161 or Plow Drv. 23334 Rot. Cult 22162 Gauge Whl 37032	Rot. Plow 22161 or Plow Drv. 23334 Rot. Cult 22162 Gauge Whl 37032
Toolholder 22411	No Kit Required (Implements Separate)	No Kit Required (Implements Separate)	No Kit Required (Implements Separate)	No Kit Required (Implements Separate)	No Kit Required (Implements Separate)
Planter Drill 15597	Rot. Plow 22161 Plow Drv. 23334 Blades 13450 or 13138	Rot. Plow 22161 Plow Drv. 23334 Blades 13450 or 13138	Rot. Plow 22161 Plow Drv. 23334 Blades 13450 or 13138	Rot. Plow 22161 Plow Drv. 23334 Blades 13450 or 13138	Rot. Plow 22161 Plow Drv. 23334 Blades 13450 or 13138

APPLICATIONS CHART
(Effective September 1, 1984)

FOUR-WHEEL TRACTOR -Mowing-	8122 (38602)	8123 (38603)	8163-B (38604)	8179-KT (34689)	8199-KT (34690)
40"/2-Blade 11362 Drive 37896 Deck	Frt. Drv. 31224 Frt. Adpt 21339 *Lift Ast 11271 *Aux Lift Asst. 18899 *Whl Brk. 35014	Frt. Drv. 31224 Frt. Adpt 21339 *Whl Brk. 35014	Frt. Drv. 31224 Frt. Adpt 21339 *Whl Brk. 35014	Not Recommended Rear wheels can not be turned inboard.	Not Recommended Rear wheels can not be turned inboard.
40"/3-Blade 34427 38685	*Lift Ast 11271	No Kit Required	No Kit Required	Will Not Work Rear wheels can not be turned inboard.	Will Not Work Rear wheels can not be turned inboard.
50"/3-Blade 38684	*Lift Ast 11271	No Kit Required	No Kit Required	No Kit Required	No Kit Required
60"/3-Blade 31229 37999	Will Not Work Must be used w/long frame.	Will Not Work Must be used w/long frame.	Will Not Work Must be used w/long frame.	No Kit Required	No Kit Required
40" Wing 31855	Not Recommended Lack of Power Cannot be used with 40".	Not Recommended Lack of Power Cannot be used with 40".	*Whl Brk. 35014 *Wght Rk. 20443 With Eng. Guard need 4 Spacers (39015) and 4 Bolts (180194)	*Whl Brk. 35014 *Wght Rk. 20443 Spacers-4 39015 Bolts-4 180194	*Whl Brk. 35014 *Wght Rk. 20443 Spacers-4 39015 Bolts-4 180194

*Recommended accessory

FOUR-WHEEL TRACTOR -Grass Catcher-	8122 (38602)	8123 (38603)	8163-B (38604)	8179-KT (34689)	8199-KT (34690)
Grass Catcher 37007 (3 Basket)	Blwr/Frm 36980 Drive Kit 38869 Boot Kit/40" 37006 Boot Kit/50" N/R Will not work with Lift Rear Hitch.	Blwr/Frm 36980 Drive Kit 38869 Boot Kit/40" 37006 Boot Kit/50" N/R Will not work with Lift Rear Hitch.	Blwr/Frm 36980 Drive Kit 37002 Boot Kit/40" 37006 Boot Kit/50" 37005 Will not work with Lift Rear Hitch.	Blwr/Frm 36980 Drive Kit 38869 Boot Kit/50" 37005 Boot Kit/60" 37004 Will not work with Lift Rear Hitch.	Blwr/Frm 36980 Drive Kit 38869 Boot Kit/50" 37005 Boot Kit/60" 37004 Will not work with Lift Rear Hitch.
Grass Catcher 37008 (Cart)	Blwr/Frm 36980 Drive Kit 38869 Boot Kit/40" 37006 Boot Kit/50" N/R Cart 38563 *Frt Wght 11924 or 38245 Will not work with Lift Rear Hitch.	Blwr/Frm 36980 Drive Kit 38869 Boot Kit/40" 37006 Boot Kit/50" N/R Cart 38563 *Frt Wght 11924 or 38245 Will not work with Lift Rear Hitch.	Blwr/Frm 36980 Drive Kit 37002 Boot Kit/40" 37006 Boot Kit/50" 37005 Cart 38563 *Frt Wght 11924 or 38245 Will not work with Lift Rear Hitch.	Blwr/Frm 36980 Drive Kit 38869 Boot Kit/50" 37005 Boot Kit/60" 37004 Cart 38563 *Frt Wght 11924 or 38245 Will not work with Lift Rear Hitch.	Blwr/Frm 36980 Drive Kit 38869 Boot Kit/50" 37005 Boot Kit/60" 37004 Cart 38563 *Frt Wght 11924 or 38245 Will not work with Lift Rear Hitch.
Grass Catcher 38090 (44-Gallon)	Blwr/Frm 36980 Drive Kit 38869 Boot Kit/40" 37006 Boot Kit/50" N/R *Frt Wght 11924 or 38245 Will not work with Lift Rear Hitch.	Blwr/Frm 36980 Drive Kit 38869 Boot Kit/40" 37006 Boot Kit/50" N/R *Frt Wght 11924 or 38245 Will not work with Lift Rear Hitch.	Blwr/Frm 36980 Drive Kit 37002 Boot Kit/40" 37006 Boot Kit/50" 37005 *Frt Wght 11924 or 38245 Will not work with Lift Rear Hitch.	Blwr/Frm 36980 Drive Kit 38869 Boot Kit/50" 37005 Boot Kit/60" 37004 *Frt Wght 11924 or 38245 Will not work with Lift Rear Hitch.	Blwr/Frm 36980 Drive Kit 38869 Boot Kit/50" 37005 Boot Kit/60" 37004 *Frt Wght 11924 or 38245 Will not work with Lift Rear Hitch.
Cart 38563	No Kit Required	No Kit Required	No Kit Required	No Kit Required	No Kit Required

*Recommended accessory

APPLICATIONS CHART
(Effective September 1, 1984)

FOUR-WHEEL TRACTOR -Snow Removal-	8122 (38602)	8123 (38603)	8163-B (38604)	8179-KT (34689)	8199-KT (34690)
Power Brush 22118	Frt. Drv. 31224 Comp. Kit 31221 *Lift Ast 11271 *Aux Lift Asst. 18899 *Whl Brk. 35014	Frt. Drv. 31224 Comp. Kit 31221 *Whl Brk. 35014	Frt. Drv. 31224 Comp. Kit 31221 *Whl Brk. 35014	Frt. Drv. 31224 Comp. Kit 31221 *Whl Brk. 35014	Frt. Drv. 31224 Comp. Kit 31221 *Whl Brk. 35014
48" Snow Dozer Blade 24678	*Frt Wght 11924 or 38245 *Rear Wgt 38250 *Wgt Rack 20443 *Chains 19377 *Whl Brk. 35014	*Frt Wght 11924 or 38245 *Rear Wgt 38250 *Wgt Rack 20443 *Chains 19377 *Whl Brk. 35014	*Frt Wght 11924 or 38245 *Rear Wgt 38250 *Wgt Rack 20443 *Chains 19377 *Whl Brk. 35014	*Frt Wght 11924 or 38245 *Rear Wgt 38250 *Wgt Rack 20443 *Tire Chains 31439 *Whl Brk. 35014	*Frt Wght 11924 or 38245 *Rear Wgt 38250 *Wgt Rack 20443 *Tire Chains 31439 *Whl Brk. 35014
40" Snowblower 38597	Frt. Drv. 31224 *Lift Ast 11271 *Aux Lift Asst. 18899 *Frt Wght 11924 or 38245 *Rear Wgt 38250 *Chains 19377 *Whl Brk. 35014 *Wgt Rack 20443	Frt. Drv. 31224 *Frt Wght 11924 or 38245 *Rear Wgt 38250 *Chains 19377 *Whl Brk. 35014 *Wgt Rack 20443	Frt. Drv. 31224 *Frt Wght 11924 or 38245 *Rear Wgt 38250 *Chains 19377 *Whl Brk. 35014 *Wgt Rack 20443 *WintrKit 24814	Not Recommended Rear wheels can not be turned inboard.	Not Recommended Rear wheels can not be turned inboard.
48" Snowblower 38599	Not Recommended Lack of Power	Not Recommended Lack of Power	Frt. Drv. 31224 *Frt Wght 11924 or 38245 *Rear Wgt 38250 *Chains 19377 *Whl Brk. 35014 *Wgt Rack 20443 *WintrKit 24814	Frt. Drv. 31224 *Frt Wght 11924 or 38245 *Rear Wgt 38250 *Chains 31439 *Whl Brk. 35014 *Wgt Rack 20443 *WintrKit 35333	Frt. Drv. 31224 *Frt Wght 11924 or 38245 *Rear Wgt 38250 *Chains 31439 *Whl Brk. 35014 *Wgt Rack 20443 *WintrKit 35333

APPLICATION CHART
(Effective September 1, 1984)

FOUR-WHEEL TRACTOR -Gardening-	8122 (38602)	8123 (38603)	8163-B (38604)	8179-KT (34689)	8199-KT (34690)
Rear Tiller 18886	Rear PTO 34691 Lift R.H. 24487 *Lift Ast 11271 *Frt Wght 11924 or 38245 *Rear Wgt 38250 *Wgt Rack 20443 *Whl Brk. 35014 *Chains 19377 *Aux Lift Asst. 18899	Rear PTO 34691 Lift R.H. 24487 *Frt Wght 11924 or 38245 *Rear Wgt 38250 *Wgt Rack 20443 *Whl Brk. 35014 *Chains 19377	Rear PTO 34691 Lift R.H. 24487 *Frt Wght 11924 or 38245 *Rear Wgt 38250 *Wgt Rack 20443 *Whl Brk. 35014 *Chains 19377	Rear PTO 34691 Lift R.H. 24487 *Frt Wght 11924 or 38245 *Rear Wgt 38250 *Wgt Rack 20443 *Whl Brk. 35014 *Chains 31439	Rear PTO 34691 Lift R.H. 24487 *Frt Wght 11924 or 38245 *Rear Wgt 38250 *Wgt Rack 20443 *Whl Brk. 35014 *Chains 31439
Rotary Plow 22161	Frt. Drv. 31224 Frt. Adpt 21339 Att. Adpt 35718	Frt. Drv. 31224 Frt. Adpt 21339 Att. Adpt 35718	Frt. Drv. 31224 Frt. Adpt 21339 Att. Adpt 35718	Not Recommended Rear wheels can not be turned inboard.	Not Recommended Rear wheels can not be turned inboard.
Center Mount Blade 21308	*Frt Wght 11924 or 38245 *Rear Wgt 38250 *Whl Brk. 35014 *Wgt Rack 20443 *Chains 19377	*Frt Wght 11924 or 382.5 *Rear Wgt 38250 *Whl Brk. 35014 *Wgt Rack 20443 *Chains 19377	*Frt Wght 11924 or 38245 *Rear Wgt 38250 *Whl Brk. 35014 *Wgt Rack 20443 *Chains 19377	*Frt Wght 11924 or 38245 *Rear Wgt 38250 *Whl Brk. 35014 *Wgt Rack 20443 *Chains 31439	*Frt Wght 11924 or 38245 *Rear Wgt 38250 *Whl Brk. 35014 *Wgt Rack 20443 *Chains 31439

*Recommended accessory

NOTES

APPLICATIONS CHART
(Effective August 15, 1985)

TWO-WHEEL TRACTOR -Mowing-	5200 (40411) (40571)	5240 (40412) (40572)	5260 (40413) (40573)	5645 (40414) (40574)	5665 (40415) (40575)	5465 (40416) (40576)
30" (Short Drive cannot be used with stamped deck.)	No Kit Required	No Kit Required	No Kit Required	No Kit Required	No Kit Required	No Kit Required
40"/2-Blade 25120	Quick Hitch Pin 35719	Quick Hitch Pin 35719	Quick Hitch Pin 35719	Quick Hitch Pin 35719	Quick Hitch Pin 35719	Quick Hitch Pin 37519
40"/2-Blade 11362 Drive 37896 Deck	No Kit Required Remove Attm. Adaptor 35718	No Kit Required Remove Attm. Adaptor 35718	No Kit Required Remove Attm. Adaptor 35718	No Kit Required Remove Attm. Adaptor 35718	No Kit Required Remove Attm. Adaptor 35718	No Kit Required Remove Attm. Adaptor 35718
32" Flail 21305	Quick Hitch Pin 35719	Quick Hitch Pin 35719	Quick Hitch Pin 35719	Quick Hitch Pin 35719	Quick Hitch Pin 35719	Quick Hitch Pin 35719
42" Sickle 10281 Drive 10287 Bar	No Kit Required Remove Attm. Adaptor 35718	No Kit Required Remove Attm. Adaptor 35718	No Kit Required Remove Attm. Adaptor 35718	No Kit Required Remove Attm. Adaptor 35718	No Kit Required Remove Attm. Adaptor 35718	No Kit Required Remove Attm. Adaptor 35718
40"/3-Blade 39000	Front Mount 15569 Quick Hitch Pin 35719	Front Mount 15569 Quick Hitch Pin 35719	Front Mount 15569 Quick Hitch Pin 35719	Front Mount 15569 Quick Hitch Pin 35719	Front Mount 15569 Quick Hitch Pin 35719	Front Mount 15569 Quick Hitch Pin 35719
50"/3-Blade 38994	Not Recommended Lack of Power	Not Recommended Lack of Power	Not Recommended Lack of Power	Front Mount 15569 Quick Hitch Pin 35719	Front Mount 15569 Quick Hitch Pin 35719	Not Recommended Lack of Power

APPLICATIONS CHART
(Effective August 15, 1985)

TWO-WHEEL TRACTOR -Snow Removal-	5200 (40411) (40571)	5240 (40412) (40572)	5260 (40413) (40573)	5645 (40414) (40574)	5665 (40415) (40575)	5465 (40416) (40576)
32" Snowblower 40694	Quick Hitch Pin 35719 *Chains (one) 11344 12125 **14950 *Cab 40564	Quick Hitch Pin 35719 *Chains (one) 11344 12125 **14950 *Cab 40564	Quick Hitch Pin 35719 *Chains (one) 11344 12125 **14950 *Cab 40564	Quick Hitch Pin 35719 *Chains (one) 11344 12125 **14950 *Cab 40564	Quick Hitch Pin 35719 *Chains (one) 11344 12125 **14950 *Cab 40564	Quick Hitch Pin 35719 *Chains (one) 11344 12125 **14950 *Cab 40564
Dozer 21466	Hitch 38288 Quick Hitch Pin 35719 *Weight 21902 *Skid 11812	Hitch 38288 Quick Hitch Pin 35719 *Weight 21902 *Skid 11812	Hitch 38288 Quick Hitch Pin 35719 *Weight 21902 *Skid 11812	Hitch 38288 Quick Hitch Pin 35719 *Weight 21902 *Skid 11812	Hitch 38288 Quick Hitch Pin 35719 *Weight 21902 *Skid 11812	Hitch 38288 Quick Hitch Pin 35719 *Weight 21902 *Skid 11812
Power Brush 22118	Quick Hitch Pin 35719 Comp. Kit 19823 *Cab 40564	Quick Hitch Pin 35719 Comp. Kit 19823 *Cab 40564	Quick Hitch Pin 35719 Comp. Kit 19823 *Cab 40564	Quick Hitch Pin 35719 Comp. Kit 19823 *Cab 40564	Quick Hitch Pin 35719 Comp. Kit 19823 *Cab 40564	Quick Hitch Pin 35719 Comp. Kit 19823 *Cab 40564
Cart 22172	Trail Hitch 11627 Coup. Strut. 11980	Trail Hitch 11627 Coup. Strut. 11980	Trail Hitch 11627 Coup. Strut. 11980	Trail Hitch 11627 Coup. Strut. 11980	Trail Hitch 11627 Coup. Strut. 11980	Trail Hitch 11627 Coup. Strut. 11980

*Recommended accessory
**Cannot be used with Steering Brake Kit

APPLICATIONS CHART
(Effective August 15, 1985)

TWO-WHEEL TRACTOR -Gardening-	5200 (40411) (40571)	5240 (40412) (40572)	5260 (40413) (40573)	5645 (40414) (40574)	5665 (40415) (40575)	5465 (40416) (40576)
Rotary Plow 22161	No Kit Required	No Kit Required	No Kit Required	No Kit Required	No Kit Required	No Kit Required
Rotary Cultivator 22162	Rotary Plow 22161 or Plow Drive 23334	Rotary Plow 22161 or Plow Drive 23334	Rotary Plow 22161 or Plow Drive 23334	Rotary Plow 22161 or Plow Drive 23334	Rotary Plow 22161 or Plow Drive 23334	Rotary Plow 22161 or Plow Drive 23334
Lawn Renovator 37021	Rot. Plow 22161 or Plow Drv. 23334 Rot. Cult 22162 Gauge Whl 37032	Rot. Plow 22161 or Plow Drv. 23334 Rot. Cult 22162 Gauge Whl 37032	Rot. Plow 22161 or Plow Drv. 23334 Rot. Cult 22162 Gauge Whl 37032	Rot. Plow 22161 or Plow Drv. 23334 Rot. Cult 22162 Gauge Whl 37032	Rot. Plow 22161 or Plow Drv. 23334 Rot. Cult 22162 Gauge Whl 37032	Rot. Plow 22161 or Plow Drv. 23334 Rot. Cult 22162 Gauge Whl 37032
Toolholder 22411	No Kit Required (Implements Separate)	No Kit Required (Implements Separate)	No Kit Required (Implements Separate)	No Kit Required (Implements Separate)	No Kit Required (Implements Separate)	No Kit Required (Implements Separate)
Planter Drill 15597	Rot. Plow 22161 or Plow Drv. 23334 Blades 13450 or 13138	Rot. Plow 22161 or Plow Drv. 23334 Blades 13450 or 13138	Rot. Plow 22161 or Plow Drv. 23334 Blades 13450 or 13138	Rot. Plow 22161 or Plow Drv. 23334 Blades 13450 or 13138	Rot. Plow 22161 or Plow Drv. 23334 Blades 13450 or 13138	Rot. Plow 22161 or Plow Drv. 23334 Blades 13450 or 13138

APPLICATIONS CHART
(Effective August 15, 1985)

FOUR-WHEEL TRACTOR -Mowing-	8122G (40138)	8123G (40123)	8163G (40153)	8179G (40152)	8199G (39809)
40"/2-Blade 11362 Drive 37896 Deck	Frt. Drv. 40252 Frt. Adpt 21339 *Lift Ast 40251 *Aux Lift Asst. 18899 *Whl Brk. 40250	Frt. Drv. 40252 Frt. Adpt 21339 *Whl Brk. 40250	Frt. Drv. 40252 Frt. Adpt 21339 *Whl Brk. 40250	Not Recommended Rear wheels can not be turned inboard.	Not Recommended Rear wheels can not be turned inboard.
40"/3-Blade 39000	*Lift Ast 40251	No Kit Required	No Kit Required	Will Not Work Rear wheels can not be turned inboard.	Will Not Work Rear wheels can not be turned inboard.
50"/3-Blade 38994	*Lift Ast 40251	No Kit Required	No Kit Required	No Kit Required	No Kit Required
60"/3-Blade 40253	Will Not Work Must be used w/long frame.	Will Not Work Must be used w/long frame.	Will Not Work Must be used w/long frame.	No Kit Required	No Kit Required
40" Wing 31855	Not Recommended Lack of Powerr Cannot be used with 40".	Not Recommended Lack of Power Cannot be used with 40".	*Whl Brk. 40250 *Wght Rk. 40638 With Eng. Guard need 4 Spacers (39015) and 4 Bolts (180194)	Spacers-4 39015 Bolts-4 180194 *Whl Brk. 40250 *Wght Rk. 40638	Spacers-4 39015 Bolts-4 180194 *Whl Brk. 40250 *Wght Rk. 40638

*Recommended accessory

FOUR-WHEEL TRACTOR -Grass Catcher-	8122G (40138)	8123G (40123)	8163G (40153)	8179G (40152)	8199G (39809)
Grass Catcher 37007 (3 Basket)	Blwr/Frm 40655 Drive Kit 38869 Boot Kit/40" 37006 Boot Kit/50" N/R Will not work with Lift Rear Hitch.	Blwr/Frm 40655 Drive Kit 38869 Boot Kit/40" 37006 Boot Kit/50" N/R Will not work with Lift Rear Hitch.	Blwr/Frm 40655 Drive Kit 37002 Boot Kit/40" 37006 Boot Kit/50" 37005 Will not work with Lift Rear Hitch.	Blwr/Frm 40655 Drive Kit 38869 Boot Kit/50" 37005 Boot Kit/60" 37004 Will not work with Lift Rear Hitch.	Blwr/Frm 40655 Drive Kit 38869 Boot Kit/50" 37005 Boot Kit/60" 37004 Will not work with Lift Rear Hitch.
Grass Catcher 37008 (Cart)	Blwr/Frm 40655 Drive Kit 38869 Boot Kit/40" 37006 Boot Kit/50" N/R Cart 38563 *Frt Wght 11924 or 38245 Will not work with Lift Rear Hitch.	Blwr/Frm 40655 Drive Kit 38869 Boot Kit/40" 37006 Boot Kit/50" N/R Cart 38563 *Frt Wght 11924 or 38245 Will not work with Lift Rear Hitch.	Blwr/Frm 40655 Drive Kit 37002 Boot Kit/40" 37006 Boot Kit/50" 37005 Cart 38563 *Frt Wght 11924 or 38245 Will not work with Lift Rear Hitch.	Blwr/Frm 40655 Drive Kit 38869 Boot Kit/50" 37005 Boot Kit/60" 37004 Cart 38563 *Frt Wght 11924 or 38245 Will not work with Lift Rear Hitch.	Blwr/Frm 40655 Drive Kit 38869 Boot Kit/50" 37005 Boot Kit/60" 37004 Cart 38563 *Frt Wght 11924 or 38245 Will not work with Lift Rear Hitch.
Grass Catcher 38090 (44-Gallon)	Blwr/Frm 40655 Drive Kit 38869 Boot Kit/40" 37006 Boot Kit/50" N/R *Frt Wght 11924 or 38245 Will not work with Lift Rear Hitch.	Blwr/Frm 40655 Drive Kit 38869 Boot Kit/40" 37006 Boot Kit/50" N/R *Frt Wght 11924 or 38245 Will not work with Lift Rear Hitch.	Blwr/Frm 40655 Drive Kit 37002 Boot Kit/40" 37006 Boot Kit/50" 37005 *Frt Wght 11924 or 38245 Will not work with Lift Rear Hitch.	Blwr/Frm 40655 Drive Kit 38869 Boot Kit/50" 37005 Boot Kit/60" 37004 *Frt Wght 11924 or 38245 Will not work with Lift Rear Hitch.	Blwr/Frm 40655 Drive Kit 38869 Boot Kit/50" 37005 Boot Kit/60" 37004 *Frt Wght 11924 or 38245 Will not work with Lift Rear Hitch.
Cart 38563	No Kit Required	No Kit Required	No Kit Required	No Kit Required	No Kit Required

*Recommended accessory

APPLICATIONS CHART
(Effective August 15, 1985)

FOUR-WHEEL TRACTOR -Snow Removal-	8122G (40138)	8123G (40123)	8163G (40153)	8179G (40152)	8199G (39809)
Power Brush 22118	Frt. Drv. 40252 Comp. Kit 40560 *Lift Ast 40251 *Aux Lift Asst. 18899 *Whl Brk. 40250 *Cab 40566	Frt. Drv. 40252 Comp. Kit 40560 *Whl Brk. 40250 *Cab 40566	Frt. Drv. 40252 Comp. Kit 40560 *Whl Brk. 40250 *Cab 40566	Frt. Drv. 40252 Comp. Kit 40560 *Whl Brk. 40250 *Cab 40566	Frt. Drv. 40252 Comp. Kit 40560 *Whl Brk. 40250 *Cab 40566
48" Snow Dozer Blade 24678	*Frt Wght 11924 or 38245 *Rear Wgt 38250 *Wgt Rack 40638 *Chains 19377 *Whl Brk. 40250	*Frt Wght 11924 or 38245 *Rear Wgt 38250 *Wgt Rack 40638 *Chains 19377 *Whl Brk. 40250	*Frt Wght 11924 or 38245 *Rear Wgt 38250 *Wgt Rack 40638 *Chains 19377 *Whl Brk. 40250	*Frt Wght 11924 or 38245 *Rear Wgt 38250 *Wgt Rack 40638 *Tire Chains 31439 *Whl Brk. 40250	*Frt Wght 11924 or 38245 *Rear Wgt 38250 *Wgt Rack 40638 *Tire Chains 31439 *Whl Brk. 40250
40" Snowblower 40693	Frt. Drv. 40252 *Lift Ast 40251 *Aux Lift Asst. 18899 *Frt Wght 11924 or 38245 *Rear Wgt 38250 *Chains 19377 *Whl Brk. 40250 *Wgt Rack 40638 *Cab 40566	Frt. Drv. 40252 *Frt Wght 11924 or 38245 *Rear Wgt 38250 *Chains 19377 *Whl Brk. 40250 *Wgt Rack 40638 *Cab 40566	Frt. Drv. 40252 *Frt Wght 11924 or 38245 *Rear Wgt 38250 *Chains 19377 *Whl Brk. 40250 *Wgt Rack 40638 *WintrKit 24814 *Cab 40566	Not Recommended Rear wheels can not be turned inboard.	Not Recommended Rear wheels can not be turned inboard.
48" Snowblower 40695	Not Recommended Lack of Power	Not Recommended Lack of Power	Frt. Drv. 40252 *Frt Wght 11924 or 38245 *Rear Wgt 38250 *Chains 19377 *Whl Brk. 40250 *Wgt Rack 40638 *WintrKit 24814 *Cab 40566	Frt. Drv. 40252 *Frt Wght 11924 or 38245 *Rear Wgt 38250 *Chains 31439 *Whl Brk. 40250 *Wgt Rack 40638 *WintrKit 35333 *Cab 40566	Frt. Drv. 40252 *Frt Wght 11924 or 38245 *Rear Wgt 38250 *Chains 31439 *Whl Brk. 40250 *Wgt Rack 40638 *WintrKit 35333 *Cab 40566

*Recommended accessory

APPLICATION CHART
(Effective August 15, 1985)

FOUR-WHEEL TRACTOR -Gardening-	8122G (40138)	8123G (40123)	8163G (40153)	8179G (40152)	8199G (39809)
Rear Tiller 18886	Rear PTO 40709 Lift R.H. 40701 *Lift Ast 40251 *Frt Wght 11924 or 38245 *Rear Wgt 38250 *Wgt Rack 40638 *Whl Brk. 40250 *Chains 19377 *Aux Lift Asst. 18899	Rear PTO 40709 Lift R.H. 40701 *Frt Wght 11924 or 38245 *Rear Wgt 38250 *Wgt Rack 40638 *Whl Brk. 40250 *Chains 19377	Rear PTO 40709 Lift R.H. 40701 *Frt Wght 11924 or 38245 *Rear Wgt 38250 *Wgt Rack 40638 *Whl Brk. 40250 *Chains 19377	Rear PTO 40709 Lift R.H. 40701 *Frt Wght 11924 or 38245 *Rear Wgt 38250 *Wgt Rack 40638 *Whl Brk. 40250 *Chains 31439	Rear PTO 40709 Lift R.H. 40701 *Frt Wght 11924 or 38245 *Rear Wgt 38250 *Wgt Rack 40638 *Whl Brk. 40250 *Chains 31439
Rotary Plow 22161	Frt. Drv. 40252 Frt. Adpt 21339 Att. Adpt 35718	Frt. Drv. 40252 Frt. Adpt 21339 Att. Adpt 35718	Frt. Drv. 40252 Frt. Adpt 21339 Att. Adpt 35718	Not Recommended Rear wheels can not be turned inboard.	Not Recommended Rear wheels can not be turned inboard.
Center Mount Blade 21308	*Frt Wght 11924 or 38245 *Rear Wgt 38250 *Whl Brk. 40250 *Wgt Rack 40638 *Chains 19377	*Frt Wght 11924 or 38245 *Rear Wgt 38250 *Whl Brk. 40250 *Wgt Rack 40638 *Chains 19377	*Frt Wght 11924 or 38245 *Rear Wgt 38250 *Whl Brk. 40250 *Wgt Rack 40638 *Chains 19377	*Frt Wght 11924 or 38245 *Rear Wgt 38250 *Whl Brk. 40250 *Wgt Rack 40638 *Chains 31439	*Frt Wght 11924 or 38245 *Rear Wgt 38250 *Whl Brk. 40250 *Wgt Rack 40638 *Chains 31439

*Recommended accessory

NOTES

NOTES

NOTES

Special Tool List

7.6	Supplier
Special Tools (see list)	Gravely
Crankcase Puller	N/A (Fabricate)
Timing Tool	N/A (Fabricate)
Starter Clutch Socket	Crowley

4W	
Forward/Reverse Tool	Wall
PTO Tool	Wall or Crowley
Hub Cap Drivers (2 sizes)	N/A (Fabricate)
Hydraulic Kit (39995)	Gravely
Seal Protector & Drivers	Crowley

Miscellaneous	
Tachometer (19200)	Briggs & Stratton
VOA Meter	Local
Volt Test Light	Local
Timing Light	Local
Spring Tool (40494)	Gravely
Triple Purpose Wrench (15367)	Gravely

James Wall
P.O. Box 999
Pilot Mountain, NC 27042
919/368-5498

Crowley Ridge Machine Works
4114 Forrest Hill Rd.
Jonesboro, AR 72401
501/932-4657

NOTES

NOTES

NOTES